DATA SWITCH AND DATA STATUS MONITOR

PRELIM PROJECT

prepared by:

Gyro A. Madrona

Electronics Engineer

GRADING SYSTEM

FINAL GRADE

30%

PRELIM

30%

MIDTERM

40%

ENDTERM

100%

LABORATORY

PENALTY

0

ABSENT

3

45-min LATE

7 max

15-min LATE

TOPIC OUTLINE

Tools and Instruments

Data Status Monitor

Data Switch

TOOLS AND INSTRUMENTS

TOOLBOX

Portable container or **storage** unit designed to hold and organize tools and other items used for various tasks and repairs

SOLDERING IRON

20W – 30W

Supplies heat to **melt solder** so that it can flow into the joint between two workpieces

DESOLDERING PUMP

Also known as **solder sucker**

Sucks the **liquid/molten solder** from the joint where the components are mounted

NEEDLE-NOSE PLIERS

Long and narrow, with **pointy**, curved or angled tips that have a strong grip

DIAGONAL WIRE CUTTERS AND END CUTTERS (NIPPERS)

Jaws intersects the joint rivet at an angle or "on a **diagonal**"

PRECISION SCREWDRIVER SET

Set of **screwdrivers**

BREADBOARDS

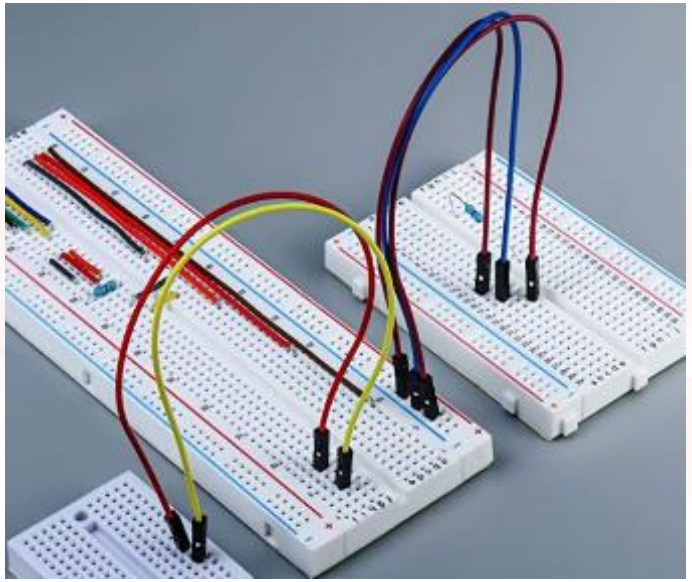

A thin plastic board used to **hold** electronic components (transistors, resistors, chips, etc.) that are wired together

JUMPER WIRES

Connect **two points** to each other without soldering

MINI DRILL

Making round **holes** or driving fasteners

MULTIMETER

Also known as a **volt-ohm meter**

Handheld tester used to measure electrical **voltage**, **current**, **resistance**, and other values

TWEEZERS

Picking up objects too **small** to be easily handled with the human fingers

WIRE STRIPPER

Remove the **insulation** from electric wires

OSCILLOSCOPE

Display and analyze the **waveform** of electronic signals

POWER SUPPLY

Powers the circuit to test individual components electrical responses

DATA STATUS MONITOR

SCHEMATIC DIAGRAM

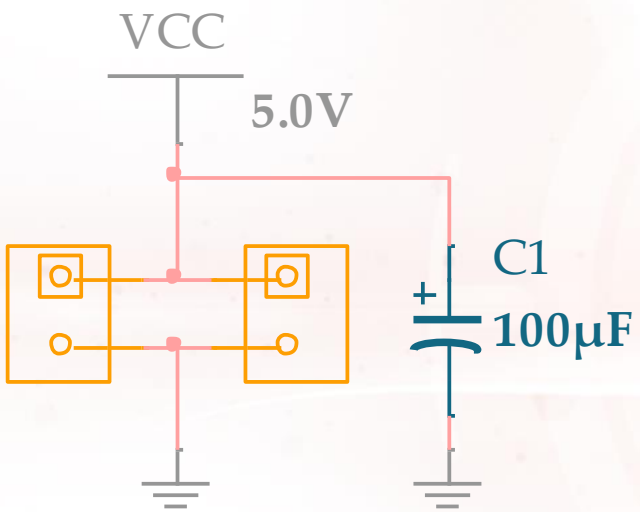

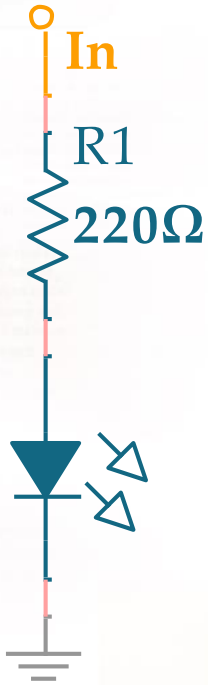

FOOTPRINT

Component	Footprint
Vcc	HDR1X2
Electrolytic Capacitor	CAPPR500-1000X1250
Carbon Resistor	RES1300-700X250
Light Emitting Diode	LED_red
Input	TEST_PT_THT

3 *in*

2 *in*

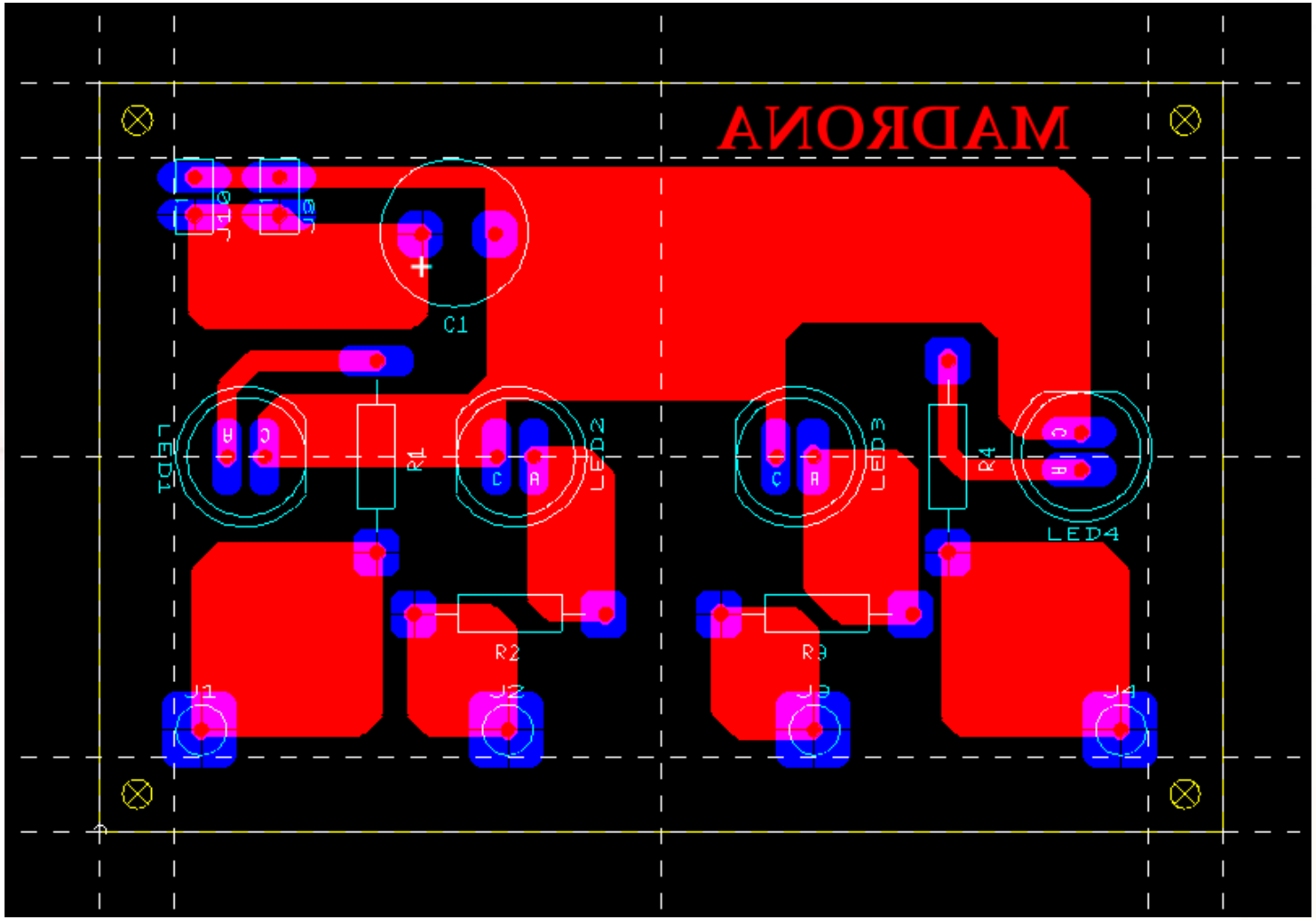

3D VIEW

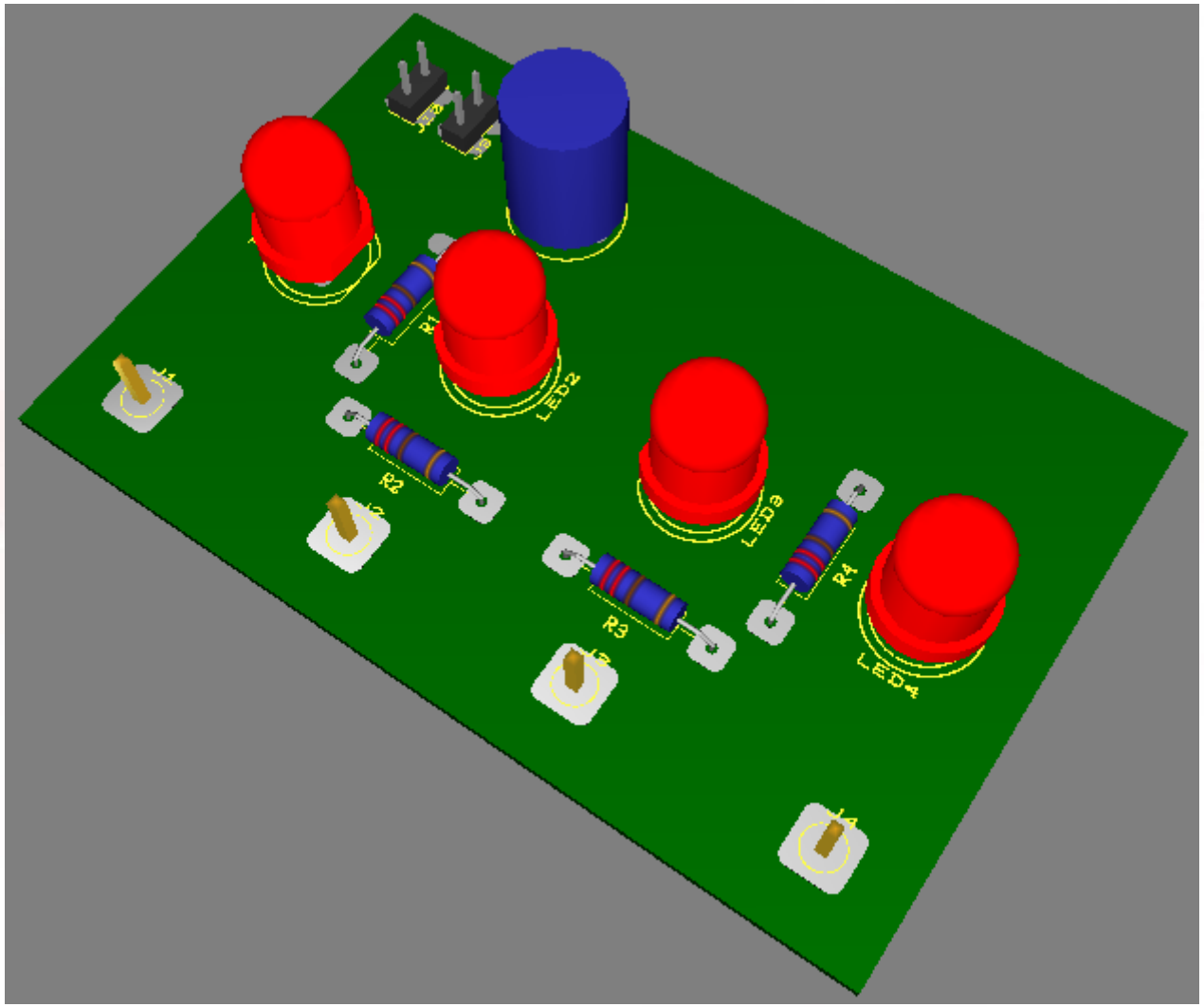

DATA SWITCH

SCHEMATIC DIAGRAM

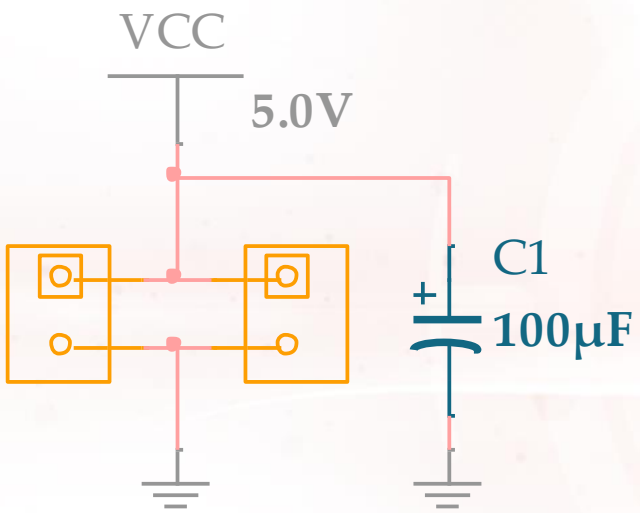

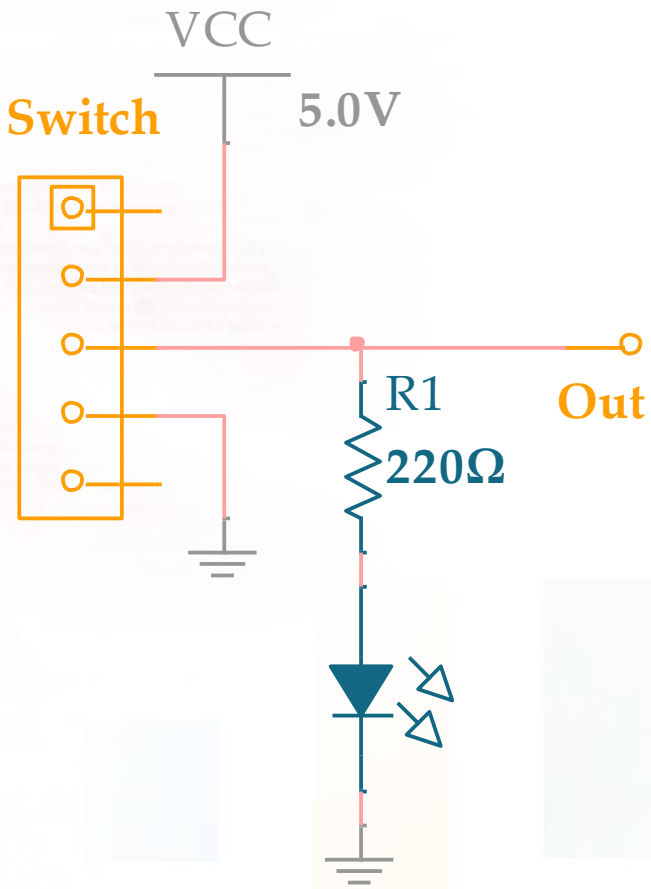

FOOTPRINT

Component	Footprint
Vcc	HDR1X2
Electrolytic Capacitor	CAPPR500-1000X1250
Slide Switch	HDR1X5
Carbon Resistor	RES1300-700X250
Light Emitting Diode	LED_red
Output	TEST_PT_THT

3 *in*

2 *in*

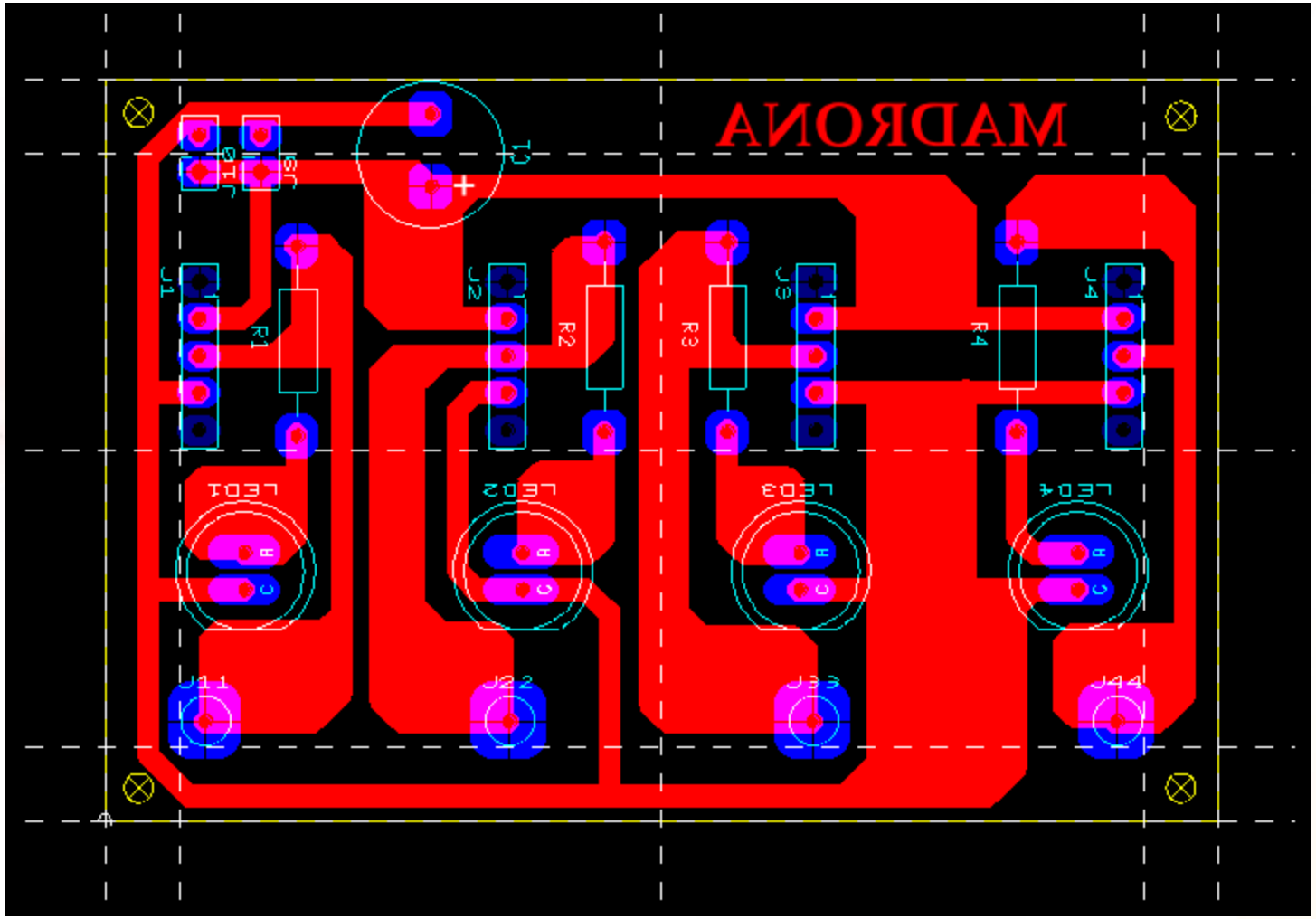
MADRONA
Q1
Q2
C1
U1
U2
U3
U4
R1
R2
R3
R4
LED1
LED2
LED3
LED4
A
C
J11
J22
J33
J44

3D VIEW

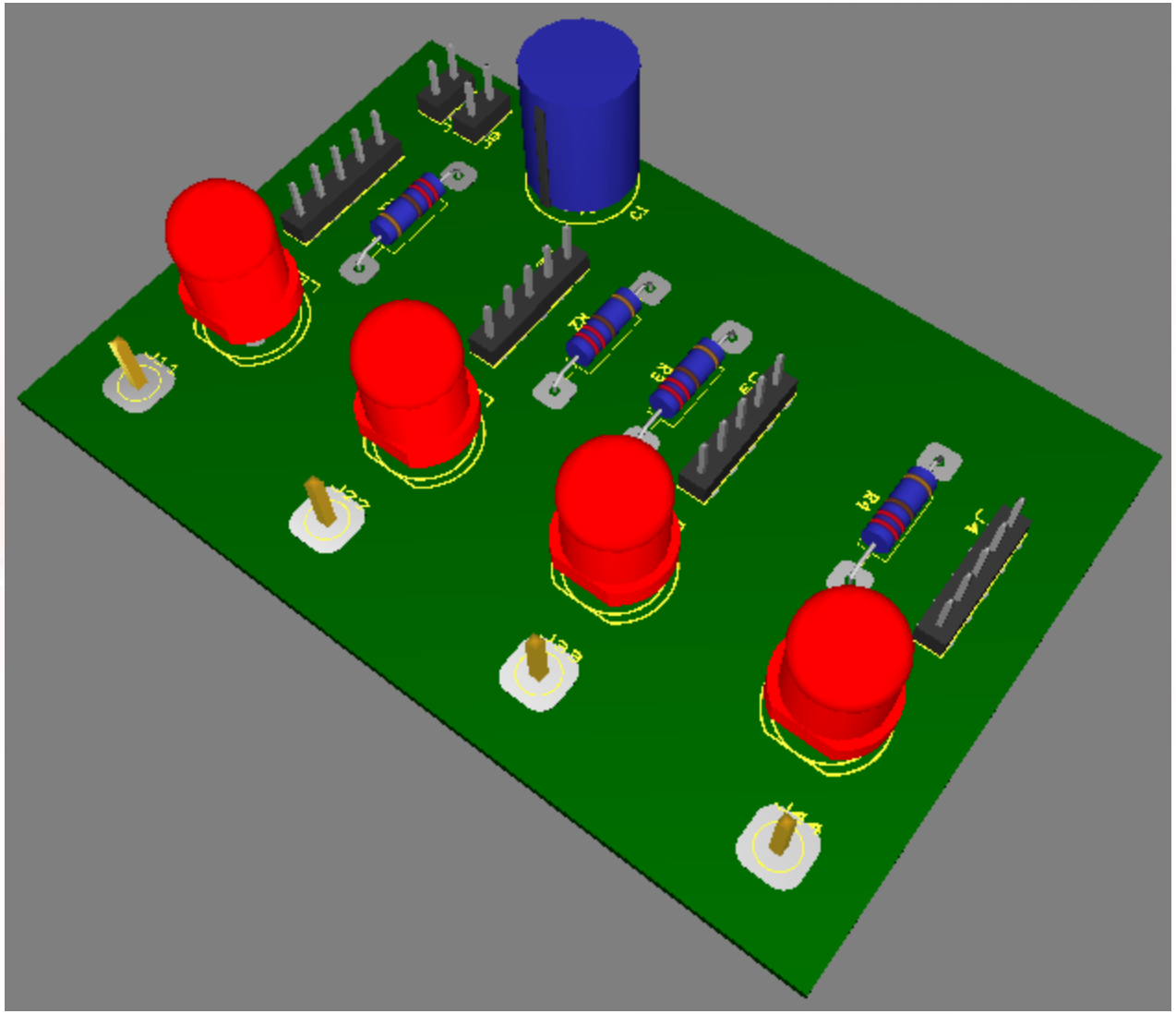

LABORATORY